ExhibitNow 4301 *AMPLIFY 20x20 with SKYFLYER and HALO Table*

This PDF template can be opened directly in Adobe Illustrator. You can design right on the "DESIGN HERE" layer, or copy each individual template into the software program of your choice.

Use these templates to setup your SkyFlyer hanging sign

Art Reference ***A1***
ART SIZE
120.39" X 49.46"

Art Reference ***A2***
ART SIZE
120.39" X 49.46"

Art Reference ***A3***
ART SIZE
120.39" X 49.46"

Art Reference ***A4***
ART SIZE
120.39" X 49.46"

90°

Art Reference ***A5***
ART SIZE
120.04" X 49.46"

Art Reference ***A6***
ART SIZE
120.04" X 49.46"

Art Reference ***A7***
ART SIZE
120.04" X 49.46"

Art Reference ***A8***
ART SIZE
120.04" X 49.46"

90°

Use these templates to setup your Amplify closet

Art Reference ***G***
ART SIZE
37.81" X 93.75"

Art Reference ***H***
ART SIZE
124.885" X 93.75"

Art Reference ***i***
ART SIZE
37.81" X 93.75"

Art Reference ***J***
ART SIZE
124.885" X 93.75"

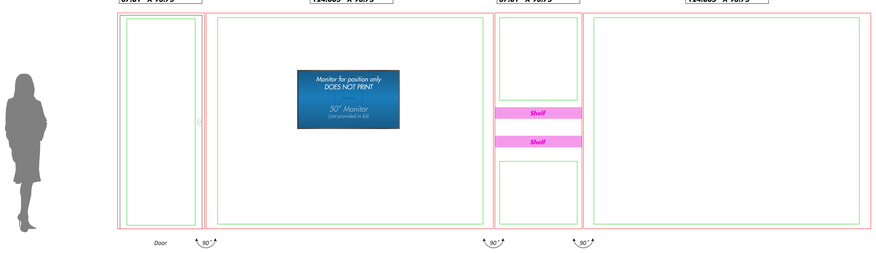

SkyFlyer A

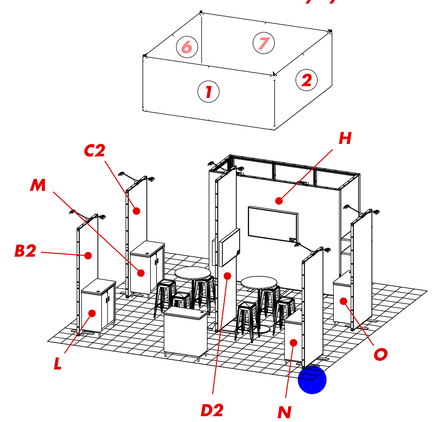

SkyFlyer A

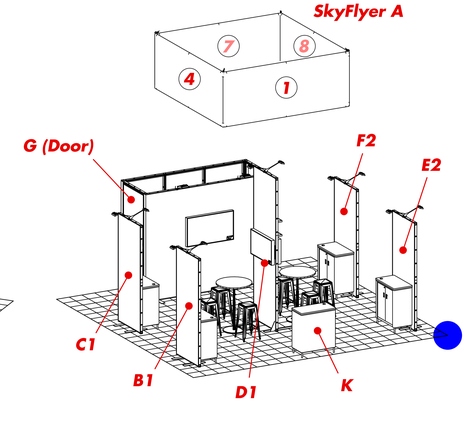

SkyFlyer A

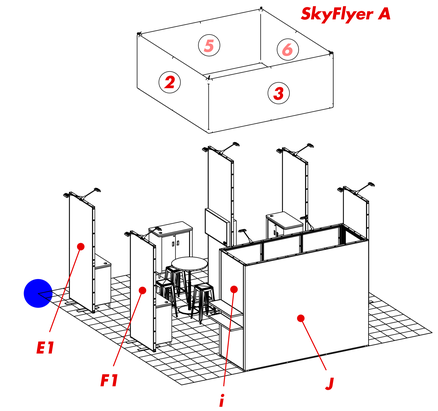

Use these templates to setup your 12' Amplify monolith

Art Reference ***D1***
ART SIZE
39.06" X 133.12"

Art Reference ***D2***
ART SIZE
39.06" X 133.12"

Art Reference ***K***
ART SIZE
71.94" X 33.63"

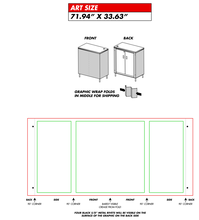

Use this template to setup your Halo greeting counter

ART SIZE *- This area contains all necessary bleed but,* ***DOES NOT GET COMPLETELY CUT OFF, MUST FILL WITH BACKGROUND ART!*** *Any art in this area can potentially be cut off, hidden or distorted in the finishing process.*

SAFE ART AREA - Keep all logos, text and critical art in this area.

Please supply native packaged art files (NOT PDFs).

All necessary bleed is built into the given art size. Leave any PANTONE Colors as PMS callouts.

GENERAL ART INSTRUCTIONS:

- *Do not embed images - supply linked images*
- *Use PhotoShop EPS links with JPEG Max Encoding for flat raster files & TIFF or PNG for layered rasters*
- *Resolution should be 100 ppi at final physical size*
- *Convert all fonts to outlined artwork*
- *Best Black=RGB 0-0-0 or CMYK 100-100-100-100*

COLOR:

Type your Pantone colors at the red x's, and fill that color in the square to the left. If no Pantone colors are listed, the color will print "as supplied" with no guarantee to color accuracy.

PANTONE COLOR			
	x		x
	x		x
	x		x

Use these templates to setup your Amplify monolith 1

Art Reference ***B1***
ART SIZE
39.06" X 93.75"

Art Reference ***B2***
ART SIZE
39.06" X 93.75"

Table

Art Reference ***L***
ART SIZE
71.94" X 33.63"

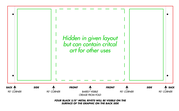

Use this template to setup your Halo counter

Use these templates to setup your Amplify monolith 2

Art Reference ***C1***
ART SIZE
39.06" X 93.75"

Art Reference ***C2***
ART SIZE
39.06" X 93.75"

Table

Art Reference ***M***
ART SIZE
71.94" X 33.63"

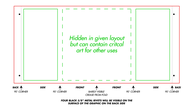

Use this template to setup your Halo counter

Use these templates to setup your Amplify monolith 3

Art Reference ***E1***
ART SIZE
39.06" X 93.75"

Art Reference ***E2***
ART SIZE
39.06" X 93.75"

Table

Art Reference ***N***
ART SIZE
71.94" X 33.63"

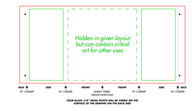

Use this template to setup your Halo counter

Use these templates to setup your Amplify monolith 4

Art Reference ***F1***
ART SIZE
39.06" X 93.75"

Art Reference ***F2***
ART SIZE
39.06" X 93.75"

Table

Art Reference ***O***
ART SIZE
71.94" X 33.63"

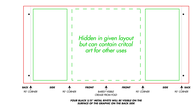

Use this template to setup your Halo counter

SAP39954 © Skyline Exhibits 260615